Summary in Graph

Exam Summary (GO Classes CS | Digital Logic | Multiplexer | Weekly Quiz 4)

Qs. Attempted:	0 (0 + 0)	Correct Marks:	0 (0 + 0)
Correct Attempts:	0 (0 + 0)	Penalty Marks:	0 (0 + 0)
Incorrect Attempts:	0 (0 + 0)	Resultant Marks:	0 (0 + 0)

Total Questions:	15 (5 + 10)
Total Marks:	25 (5 + 20)
Exam Duration:	45 Minutes
Time Taken:	0 Minutes

Individual Question Statistics

Select Metric: Marks Obtained

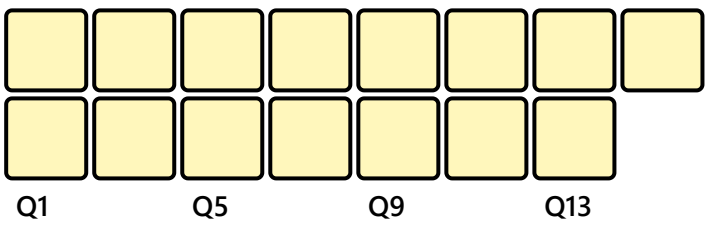

* Average Stats based on first-attempt stats of Top 10% (36) out of 355 users

EXAM RESPONSE EXAM STATS FEEDBACK

Technical

Q #1 Multiple Choice Type Award: 1 Penalty: 0.33 Digital Logic

The logic function implemented by the circuit below is (ground implies a logic "0")

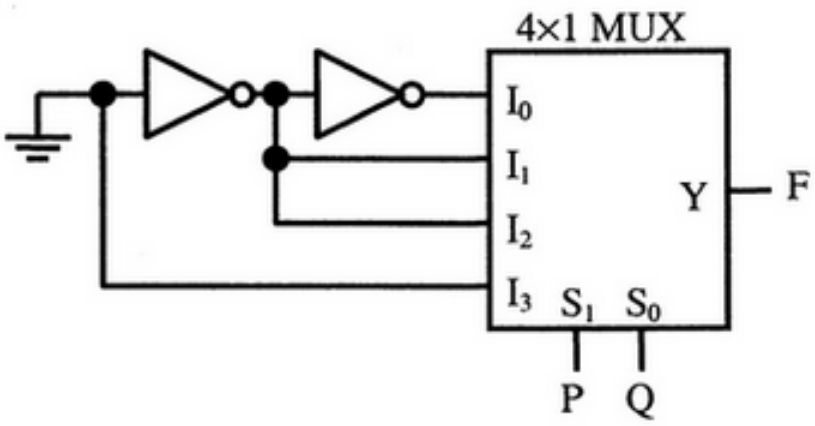

A. F=AND(P,Q)
B. F=OR(P,Q)
C. F=XNOR(P,Q)
D. F=XOR(P,Q)

Your Answer: | Correct Answer: D | Not Attempted | Time taken: 00min 00sec | Discuss

Q #2 | Multiple Choice Type | Award: 1 | Penalty: 0.33 | Digital Logic

The figure below shows a multiplexer where S_1 and S_0 are the select lines, I_0 to I_3 are the input data lines, EN is the enable line, and $\mathrm{F(P, Q, R)}$ is the output. F is

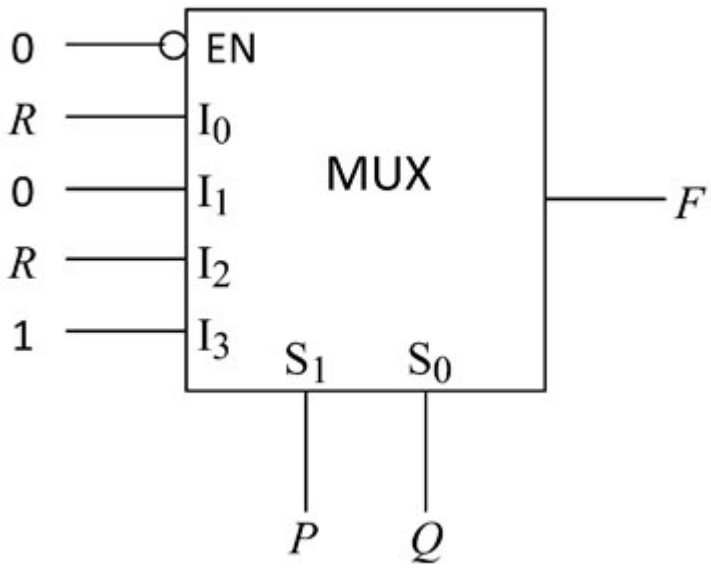

A. $PQ + \overline{Q}R.$
B. $PQ + Q\overline{R}.$
C. $\overline{PQR} + \overline{PQ}.$
D. $\overline{Q} + PR.$

Your Answer: | Correct Answer: A | Not Attempted | Time taken: 00min 00sec | Discuss

Q #3 | Multiple Choice Type | Award: 1 | Penalty: 0.33 | Digital Logic

An 8- to 1 multiplexer is used to implement a logical function Y as shown in the figure. The output Y is given by

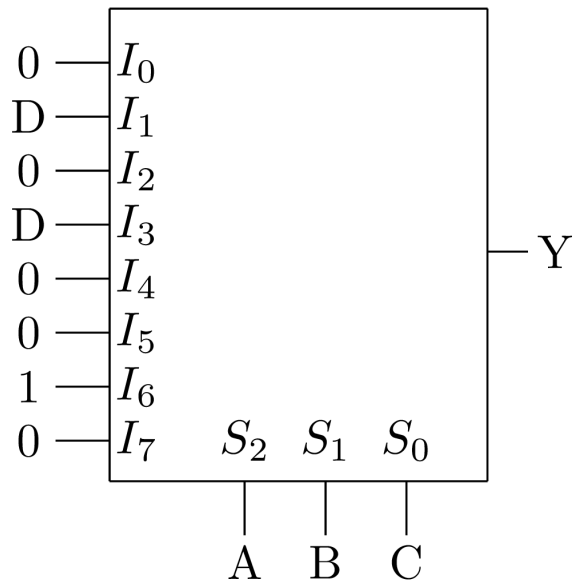

A. $Y = A\,\overline{B}\,C + A\,\overline{C}\,D$
B. $Y = \overline{A}\,B\,C + A\,\overline{B}\,D$
C. $Y = A\,B\,\overline{C} + \overline{A}\,C\,D$
D. $Y = \overline{A}\,\overline{B}\,D + A\,\overline{B}\,C$

Your Answer: | Correct Answer: C | Not Attempted | Time taken: 00min 00sec | Discuss

Q #4 Multiple Choice Type | Award: 1 | Penalty: 0.33 | Digital Logic

Consider the 2–bit multiplexer (MUX) shown in the figure. For OUTPUT to be the XOR of C and D, the values for A_0, A_1, A_2, and A_3 are _____.

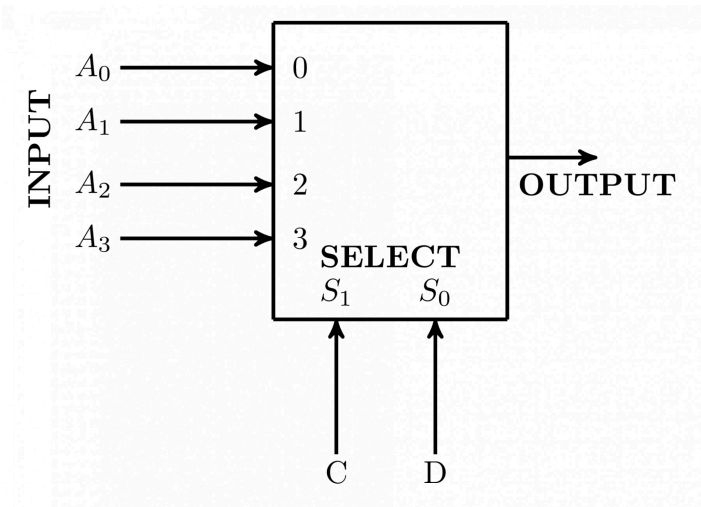

A. $A_0 = 0, A_1 = 0, A_2 = 1, A_3 = 1$
B. $A_0 = 1, A_1 = 0, A_2 = 1, A_3 = 0$
C. $A_0 = 0, A_1 = 1, A_2 = 1, A_3 = 0$
D. $A_0 = 1, A_1 = 1, A_2 = 0, A_3 = 0$

Your Answer: | Correct Answer: C | Not Attempted | Time taken: 00min 00sec | Discuss

Q #5 Multiple Choice Type | Award: 1 | Penalty: 0.33 | Digital Logic

In the circuit shown below, P and Q are the inputs. The logical function realized by the circuit shown below is

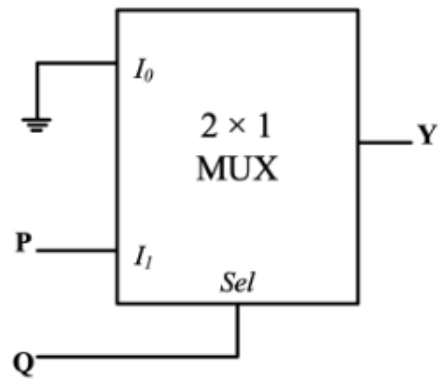

A. $Y = PQ$
B. $Y = P + Q$
C. $Y = \overline{PQ}$
D. $Y = \overline{P + Q}$

Your Answer: | Correct Answer: A | Not Attempted | Time taken: 00min 00sec | Discuss

Q #6 | Multiple Choice Type | Award: 2 | Penalty: 0.67 | Digital Logic

The Boolean function realized by the logic circuit shown is

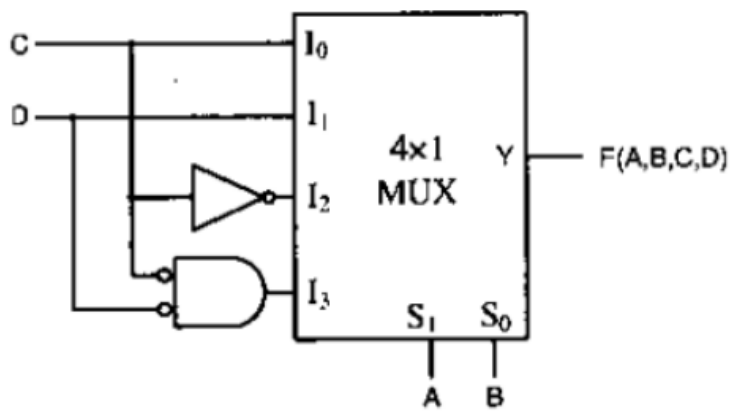

A. $F = \sum_m(0, 1, 3, 5, 9, 10, 14)$
B. $F = \sum_m(2, 3, 5, 7, 8, 12, 13)$
C. $F = \sum_m(1, 2, 4, 5, 11, 14, 15)$
D. $F = \sum_m(2, 3, 5, 7, 8, 9, 12)$

Your Answer: | Correct Answer: D | Not Attempted | Time taken: 00min 00sec | Discuss

Q #7 | Multiple Choice Type | Award: 2 | Penalty: 0.67 | Digital Logic

A four-variable Boolean function is realized using 4×1 multiplexers as shown in the figure.

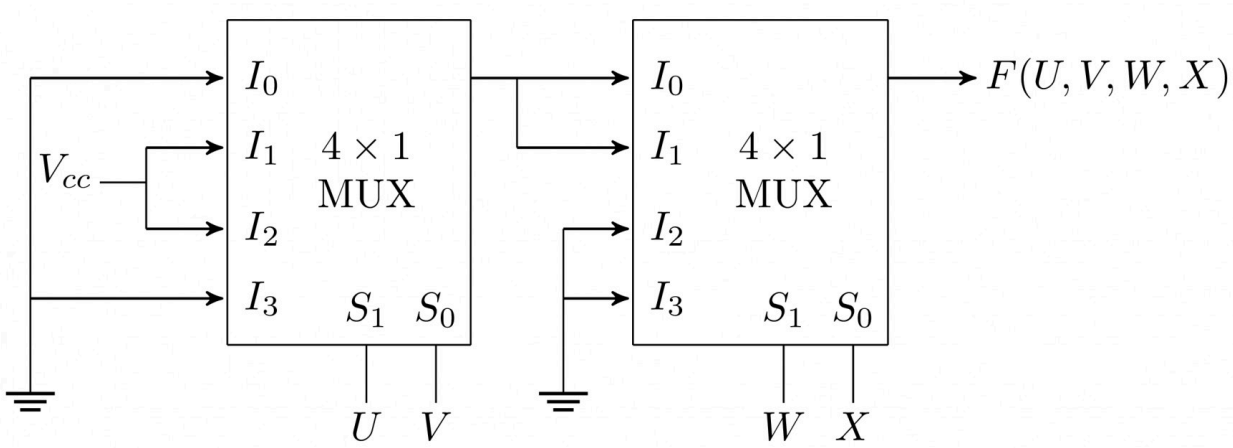

The minimized expression for $F(U,V,W,X)$ is

A. $\left(UV + \overline{U}\,\overline{V}\right)\overline{W}$

B. $\left(UV + \overline{U}\,\overline{V}\right)\left(\overline{W}\,\overline{X} + \overline{W}\,X\right)$
C. $\left(U\,\overline{V} + \overline{U}\,V\right)\overline{W}$
D. $\left(U\,\overline{V} + \overline{U}\,V\right)\left(\overline{W}\,\overline{X} + \overline{W}\,X\right)$

Your Answer: | Correct Answer: C | Not Attempted | Time taken: 00min 00sec | Discuss

Q #8 | Multiple Choice Type | Award: 2 | Penalty: 0.67 | Digital Logic

In the circuit shown, W and Y are MSBs of the control inputs. The output F is given by

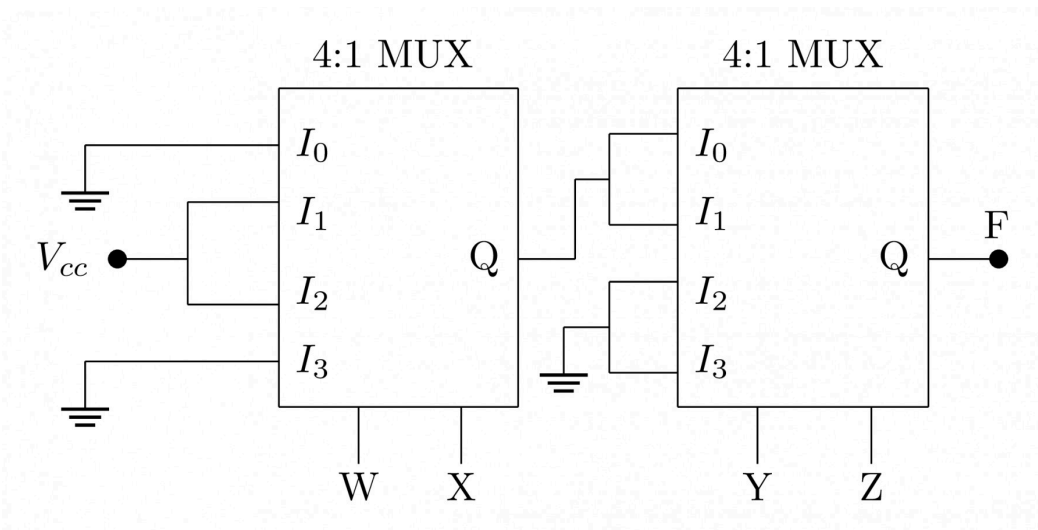

A. $F = W\overline{X} + \overline{W}X + \overline{Y}\,\overline{Z}$
B. $F = W\overline{X} + \overline{W}X + \overline{Y}Z$
C. $F = W\overline{X}\,\overline{Y} + \overline{W}X\overline{Y}$
D. $F = (\overline{W} + \overline{X})\overline{Y}\,\overline{Z}$

Your Answer: | Correct Answer: C | Not Attempted | Time taken: 00min 02sec | Discuss

Q #9 | Multiple Choice Type | Award: 2 | Penalty: 0.67 | Digital Logic

Consider the multiplexer based logic circuit shown in the figure.

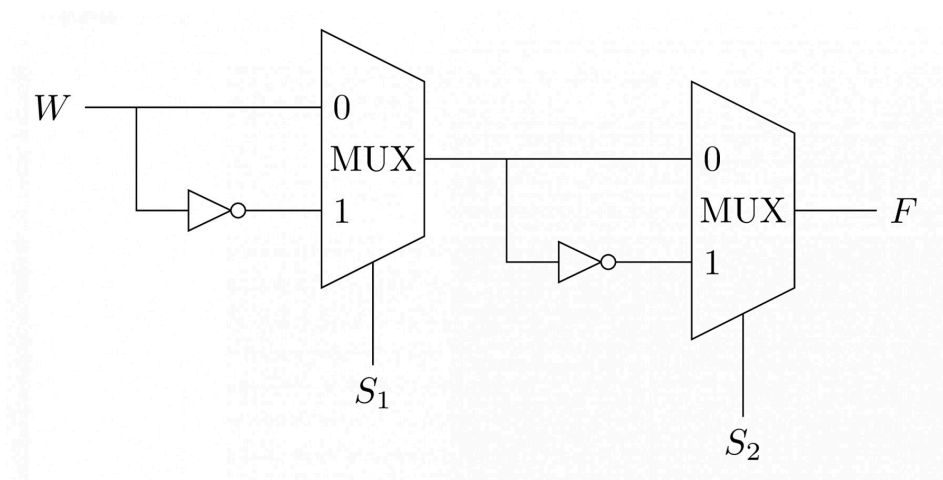

Which one of the following Boolean functions is realized by the circuit?

A. $F = W\overline{S_1}\,\overline{S_2}$
B. $F = WS_1 + WS_2 + S_1S_2$
C. $F = \overline{W} + S_1 + S_2$
D. $F = W \oplus S_1 \oplus S_2$

Your Answer: | Correct Answer: D | Not Attempted | Time taken: 00min 00sec | Discuss

Q #10 | Multiple Choice Type | Award: 2 | Penalty: 0.67 | Digital Logic

Consider the circuit shown in the figure.

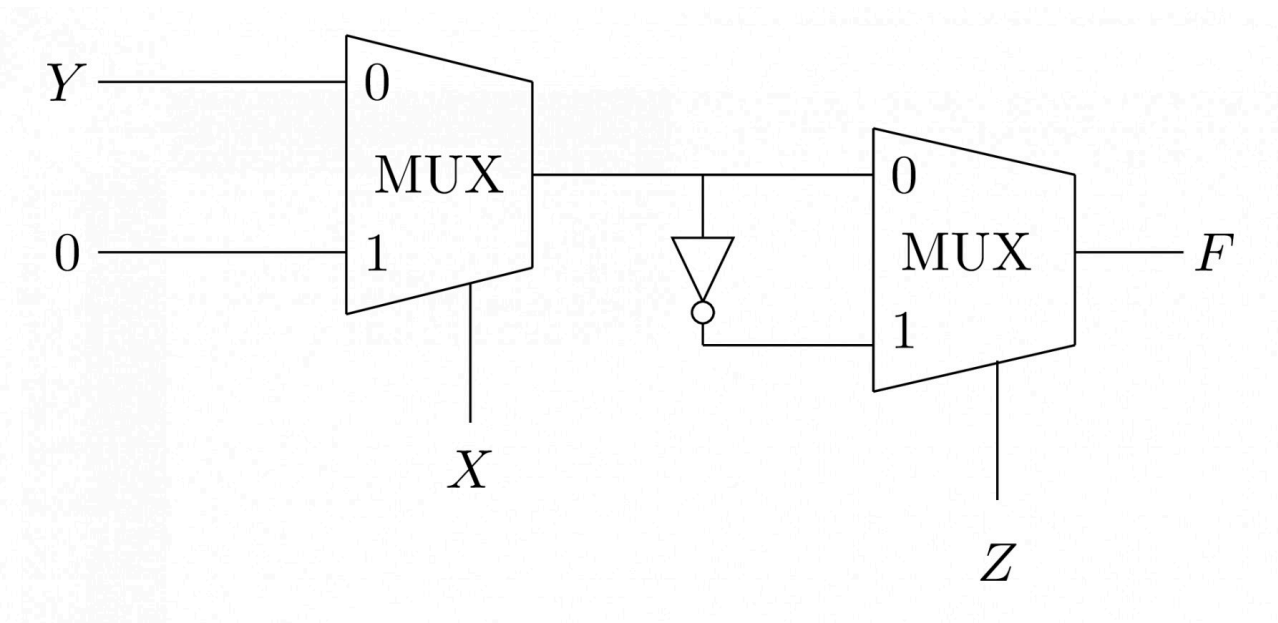

The Boolean expression F implemented by the circuit is

A. $\overline{X}\,\overline{Y}\,\overline{Z} + \overline{X}\,\overline{Y} + \overline{Y}\,Z$
B. $\overline{X}Y\overline{Z} + XZ + \overline{Y}\,Z$
C. $\overline{X}Y\overline{Z} + XY + \overline{Y}\,Z$
D. $\overline{X}\,\overline{Y}\,\overline{Z} + XZ + \overline{Y}\,Z$

Your Answer: | Correct Answer: B | Not Attempted | Time taken: 00min 00sec | Discuss

Q #11 | Multiple Choice Type | Award: 2 | Penalty: 0.67 | Digital Logic

A Boolean function $f(A, B, C, D) = \prod(1, 5, 12, 15)$ is to be implemented using an 8×1 multiplexer (A is MSB). The inputs ABC are connected to the select inputs $S_2S_1S_0$ of the multiplexer respectively.

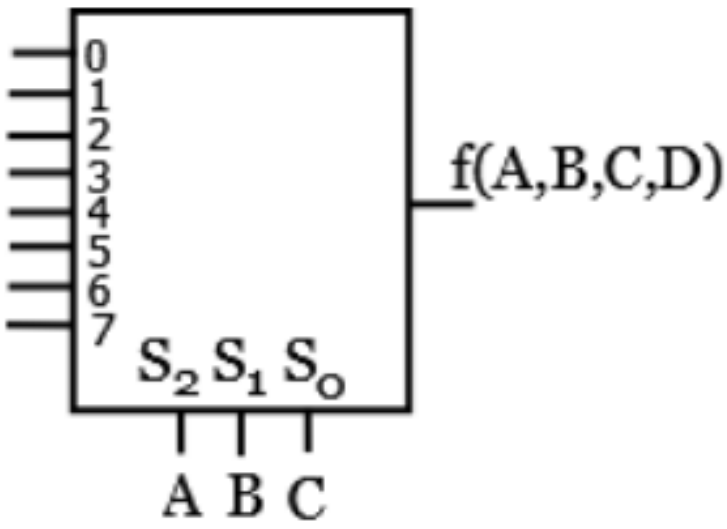

Which one of the following options gives the correct inputs to pins $0, 1, 2, 3, 4, 5, 6, 7$ in order?

A. $D, 0, D, 0, 0, 0, \overline{D}, D$
B. $\overline{D}, 1, \overline{D}, 1, 1, 1, D, \overline{D}$
C. $D, 1, D, 1, 1, 1, \overline{D}, D$
D. $\overline{D}, 0, \overline{D}, 0, 0, 0, D, \overline{D}$

Your Answer: | Correct Answer: B | Not Attempted | Time taken: 00min 00sec | Discuss

Q #12 | Multiple Choice Type | Award: 2 | Penalty: 0.67 | Digital Logic

In the 4×1 multiplexer, the output F is given by $F = A \oplus B$. Find the required input $'I_3, I_2, I_1, I_0'$.

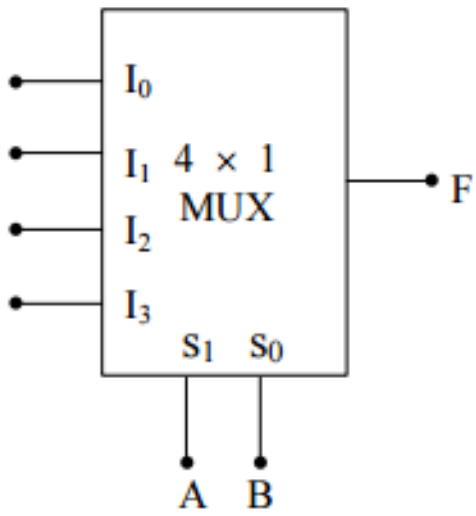

A. 1010
B. 0110
C. 1000
D. 1110

Your Answer: | Correct Answer: B | Not Attempted | Time taken: 00min 00sec | Discuss

Q #13 | Multiple Choice Type | Award: 2 | Penalty: 0.67 | Digital Logic

Consider the following circuit which uses a 2-to-1 multiplexer as shown in the figure below. The Boolean expression for output F in terms of A and B is

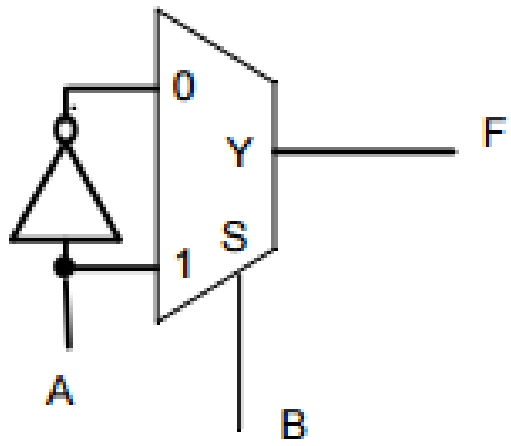

A. $A \oplus B$
B. $\overline{A+B}$
C. $A+B$
D. $\overline{A \oplus B}$

Your Answer: | Correct Answer: D | Not Attempted | Time taken: 00min 00sec | Discuss

Q #14 | Multiple Select Type | Award: 2 | Penalty: 0 | Digital Logic

The output F of the digital circuit shown can be written in the form(s) _____

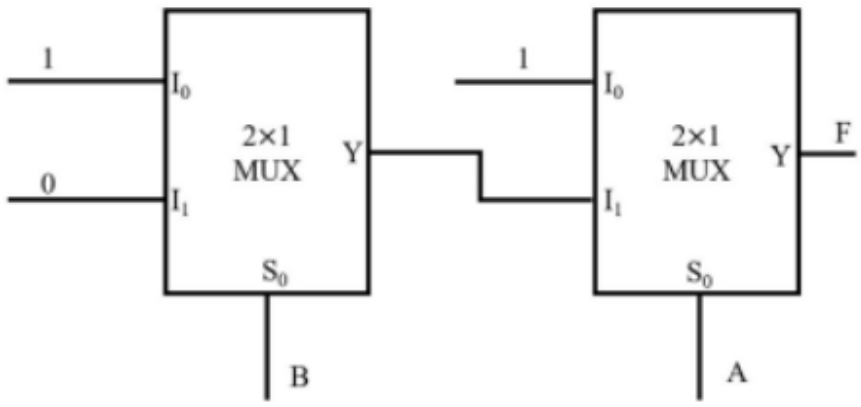

A. $\overline{A \cdot B}$
B. $\overline{A} + \overline{B}$
C. $\overline{A + B}$
D. $\overline{A} \cdot \overline{B}$

Your Answer: | Correct Answer: A;B | Not Attempted | Time taken: 00min 00sec | Discuss

Q #15 Multiple Choice Type | Award: 2 | Penalty: 0.67 | Digital Logic

A 4×1 multiplexer with two selector lines is used to realize a Boolean function F having four Boolean variables X, Y, Z and W as shown below. S_0 and S_1 denote the least significant bit (LSB) and most significant bit (MSB) of the selector lines of the multiplexer respectively. I_0, I_1, I_2, I_3 are the input lines of the multiplexer.

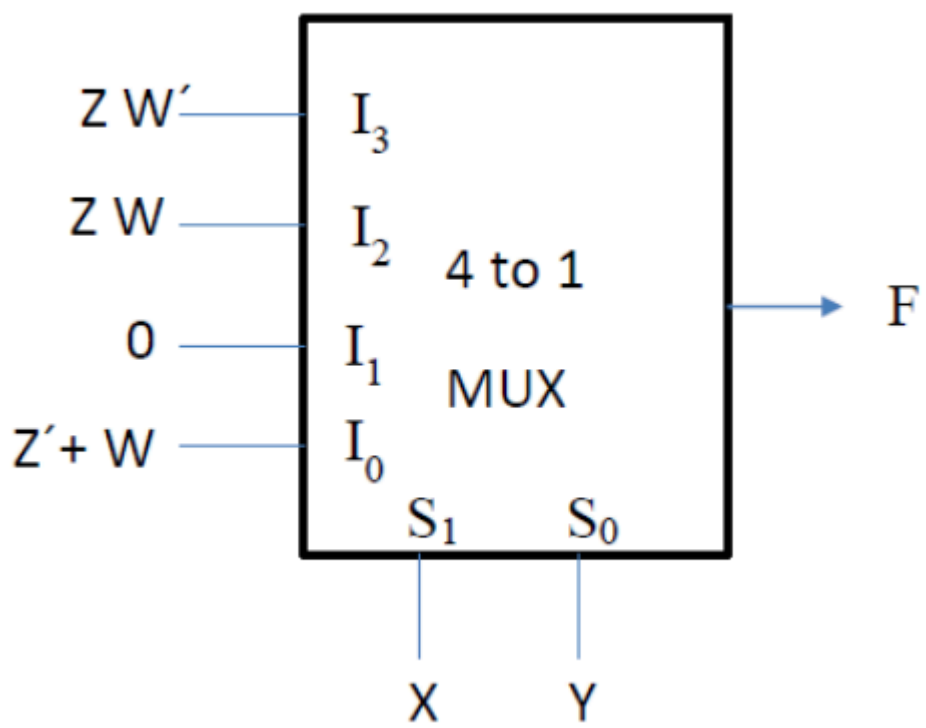

The canonical sum of product representation of F is

A. $F(X, Y, Z, W) = \sum \mathrm{m}(0, 1, 3, 14, 15)$
B. $F(X, Y, Z, W) = \sum \mathrm{m}(0, 1, 3, 11, 14)$
C. $F(X, Y, Z, W) = \sum \mathrm{m}(2, 5, 9, 11, 14)$
D. $F(X, Y, Z, W) = \sum \mathrm{m}(1, 3, 7, 9, 15)$

Your Answer: | Correct Answer: B | Not Attempted | Time taken: 00min 00sec | Discuss

Copyright & Stuff